Data Sheet

Article number: 1405014481
Description: KLEE fork joint with outside thread
G 14x28 med 14x2 mm thread

Measures

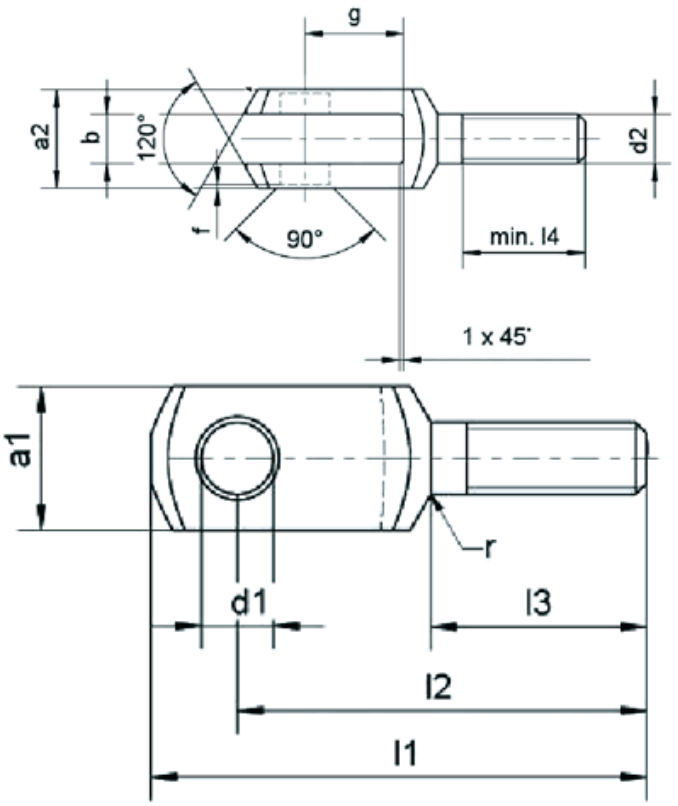

a1 = 27	l2 = 78
a2 = 27	l3 = 40
b = 14	l4 = 35
d1 = 14	r = 1,2
d2 = M 14x2	
f = 1	
g = 28	
l1 = 94	

Product drawings and brochures of any kind may contain errors for which Brd. Klee A/S cannot be liable.